# Design and Use of an Interim Noble Gas Effluent Monitor at Columbia Generating Station

**RETS-REMP & EPRI Groundwater Protection Workshop**

June 25-27th, 2013

Westminster, CO

Eric L. Darois, CHP (RSCS)

Jim Snyder (Columbia Generating Station)

Radiation Safety & Control Services, Inc.

# Why?

- Channel Replacement
  - Turbine Building NG Monitor
  - Radwaste Building NG Monitor
  - Monitors OOS for “Weeks”
  - Tech Spec Required Operability
- Alternatives
  - Compensatory Sampling
    - 8 Hour Intervals
    - Consequence of Missed Sample

RSCS
Radiation Safety & Control Services

# Design Objectives

- Detection Range
  - MDC - ~5E-6 uCi/cc
  - UDC - >1E0 uCi/cc
  - Xe-133?
  - Xe-133 “Equivalent”?
  - Accident NG Mix?

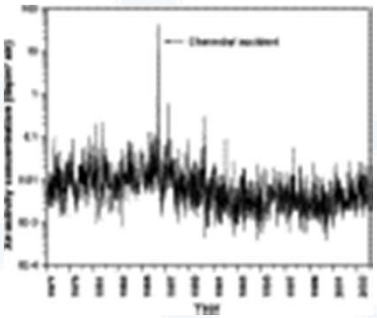

- Remote Indications – Audio/Visual, Trending
- Commercial Availability of Components
- Accuracy +/- 20% Per RG 1.97
- Weight

RSCS
Radiation Safety & Control Services

# Instrument Selection

- Mirion's RDS-31 w/GMP-25 Pancake GM Probe
- Extended Range – 3,000,000 cpm
  - "Time to Count" Technology
- Remote Readout over existing plant telemetry system (Mirion)
- Ambient Monitoring
  - Internal Detector for changes in background

RSCS
Radiation Safety & Control Services

# Chamber Design and Assembly

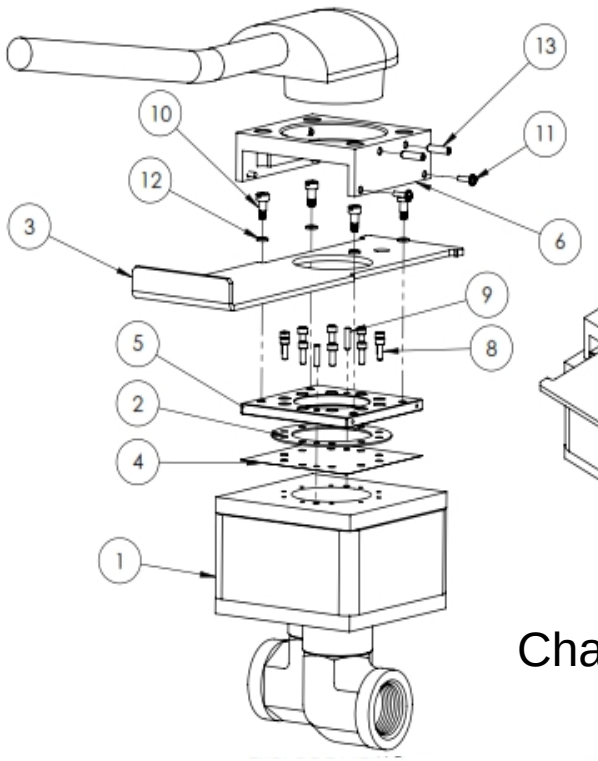


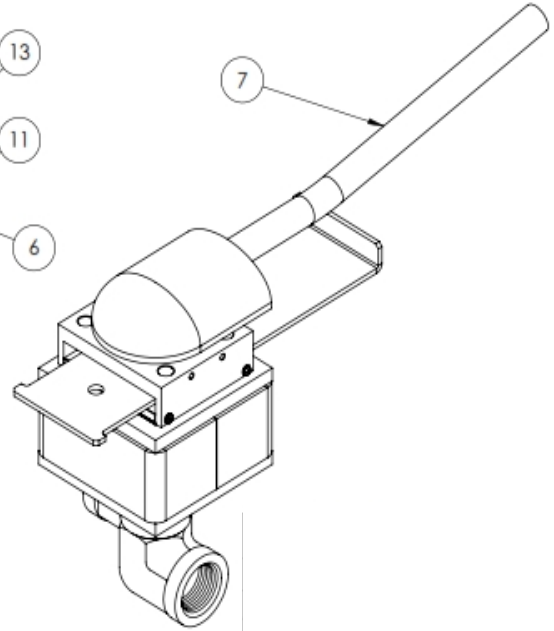


Chamber and Probe

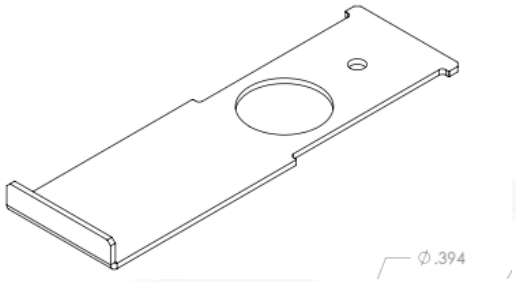


High Range/Intermediate Range Slide

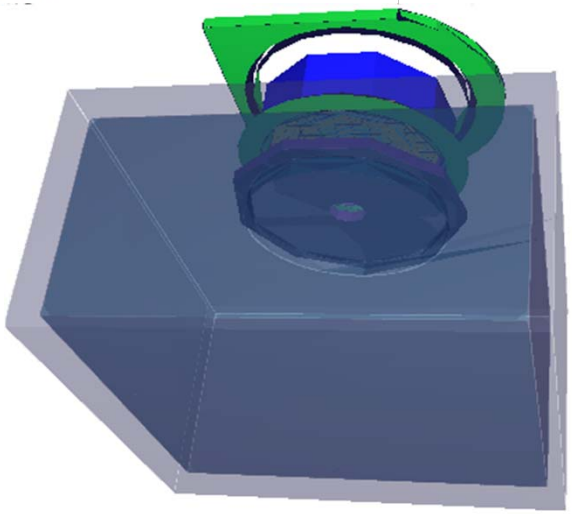

Transparent View From Bottom

RSCS
Radiation Safety & Control Services

# Shielding Configuration

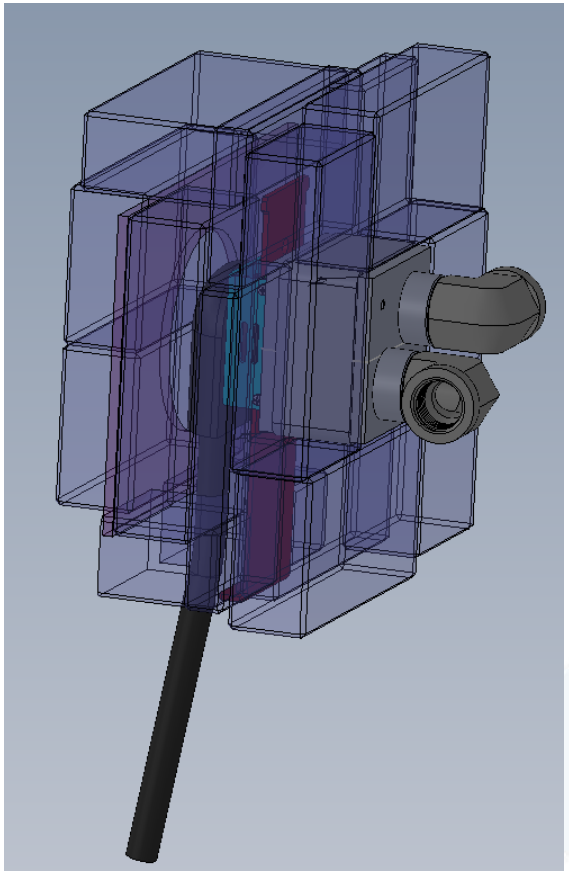

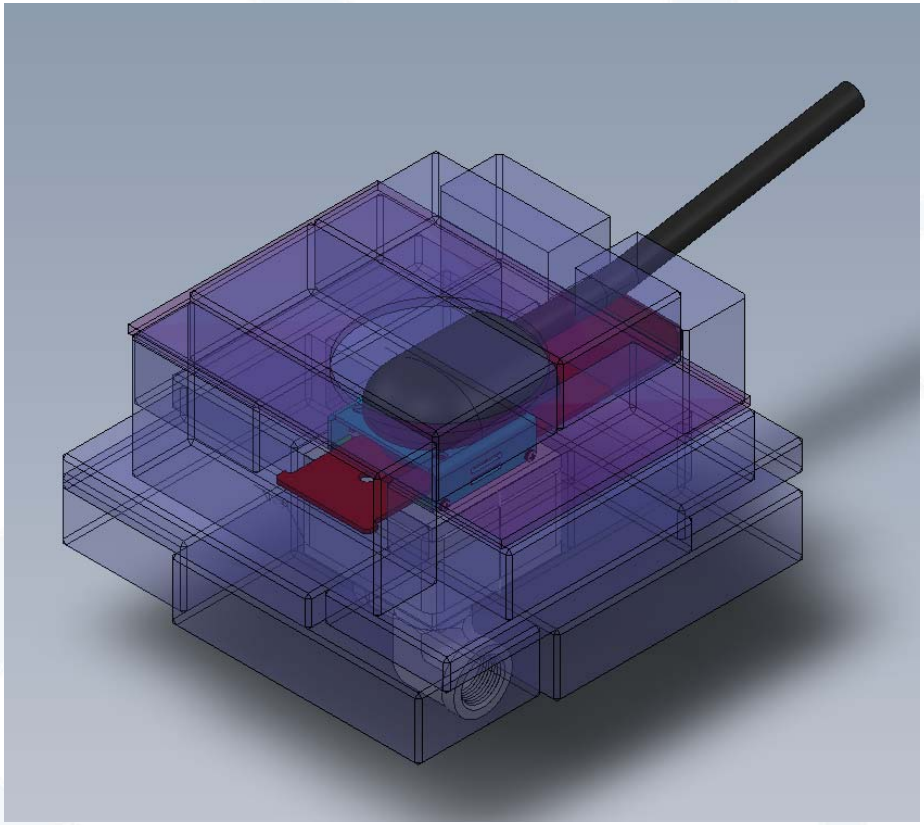

RSCS
Radiation Safety & Control Services

# Source Term

## (30 Minute Post LOCA)

| Isotope | Percent Activity |
|---|---|
| $^{83m}Kr$ | 2.88 |
| $^{85m}Kr$ | 5.55 |
| $^{85}Kr$ | 0.00 |
| $^{87}Kr$ | 14.88 |
| $^{88}Kr$ | 17.85 |
| $^{131m}Xe$ | 0.02 |
| $^{133m}Xe$ | 0.30 |
| $^{133}Xe$ | 8.13 |
| $^{135m}Xe$ | 6.84 |
| $^{135}Xe$ | 21.82 |
| $^{137}Xe$ | 0.69 |
| $^{138}Xe$ | 20.83 |

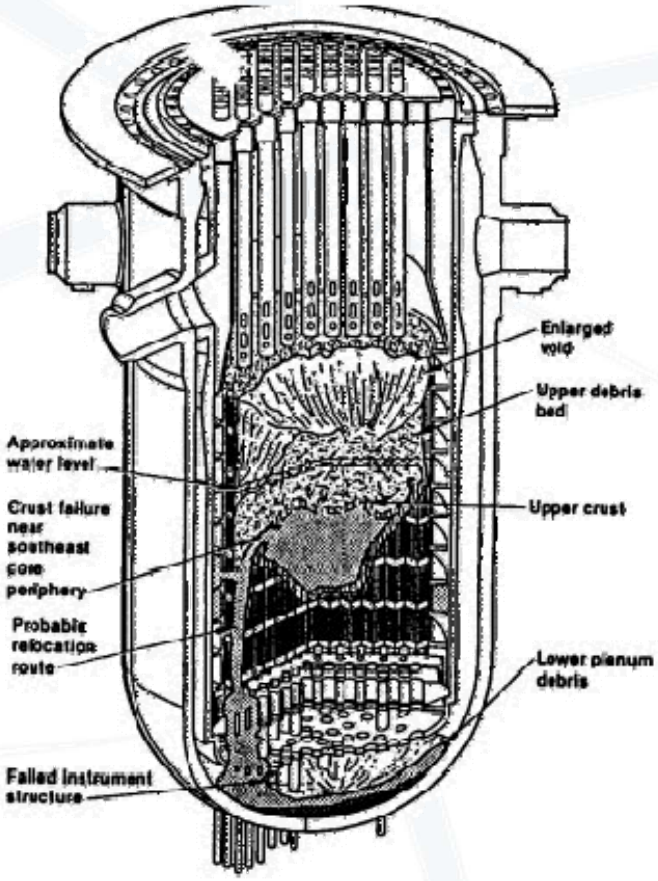


RSCS
Radiation Safety & Control Services

# Isotope Abundance with Decay

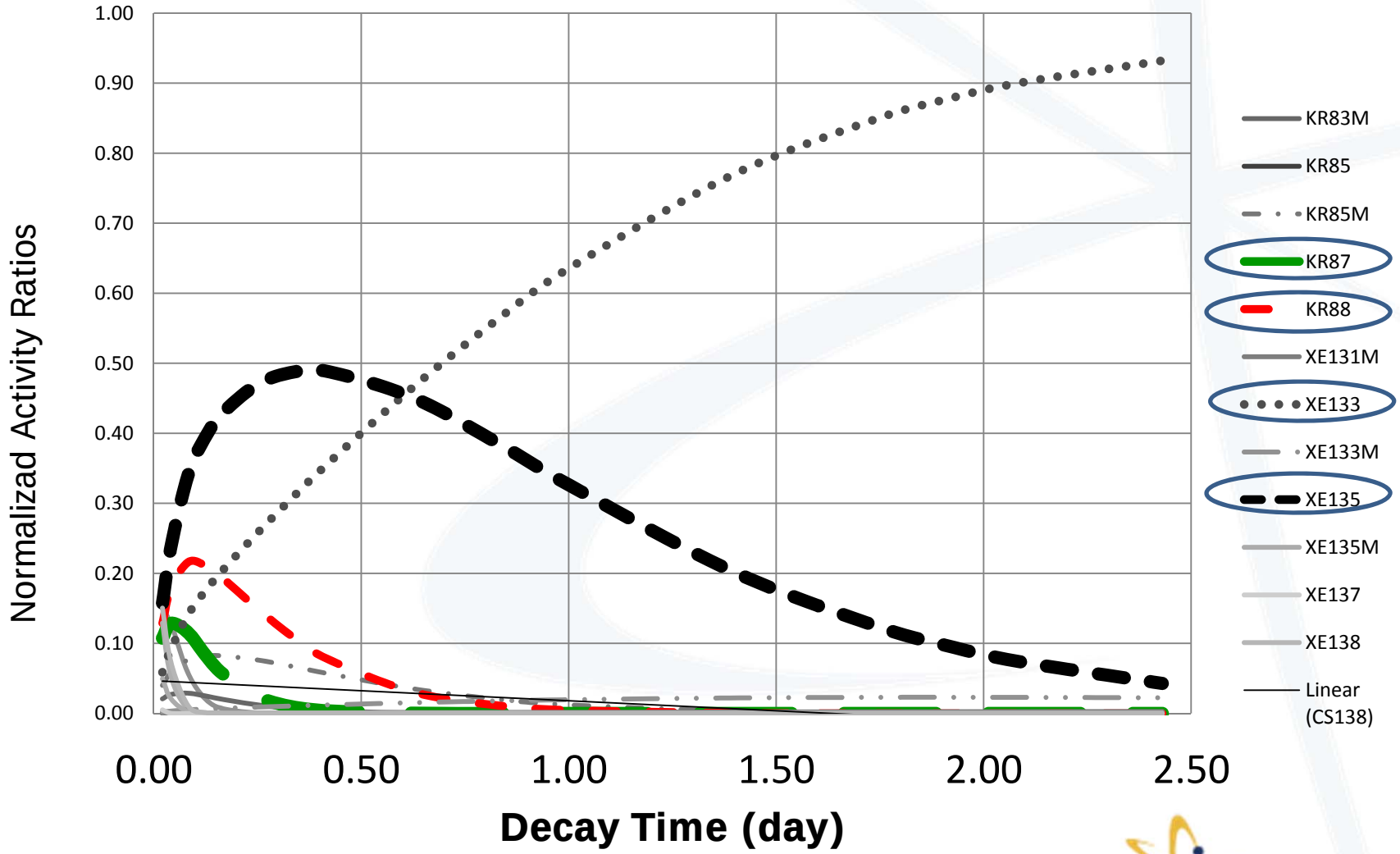


RSCS
Radiation Safety & Control Services

# MCNP Simulations of Detector Response

- Monte Carlo N-Particle Transport Code Version 4.8s (MCNPX).
- Emission Data from Brookhaven National Data Center
- Beta Spectrums from ICRP38 or Eckerman et.al.
- Energy Transport from 1 Kev to 100 MeV for photons and electrons

RSCS
Radiation Safety & Control Services

# More on MCNP Modeling

- Modeling Accounts for:
  - coherent scattering
  - Doppler energy broadening
  - photons producing electrons
  - electrons producing photons
  - full bremsstrahlung angular distribution approximations
  - Compton profiles with electron binding effects
  - electron-induced x-rays
  - knock-on electrons
  - photon-induced secondary electrons

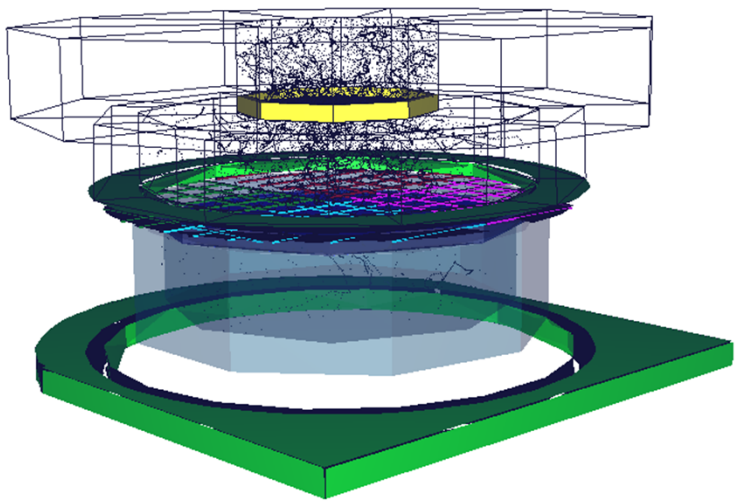

- "F8 Tallies" Used to Represent Detector Response
- Uncertainites ~ 1 to 3 % Depending on E(Kev)
  - Collision Stopping Powers
  - Photon Cross Sections

RSCS
Radiation Safety & Control Services

# Response Factor Calculations

$$\text{cpm uCi}^{-1}\ \text{cm}^{3}$$

$$\left(\frac{\quad}{\quad}\right)\left(\frac{\quad}{\quad}\right)\left(\frac{\quad}{\quad}\right)\left(\quad\right)$$

| Isotope | Interim Int. Range | Interim Low Range |
|---|---|---|
| $^{85}$Kr | 8.26E+05 | 1.55E+07 |
| $^{85m}$Kr | 8.79E+05 | 1.55E+07 |
| $^{87}$Kr | 1.90E+06 | 3.02E+07 |
| $^{88}$Kr | 1.46E+06 | 1.56E+07 |
| $^{131m}$Xe | 1.34E+05 | 2.84E+06 |
| $^{133}$Xe | 2.30E+05 | 4.59E+06 |
| $^{133m}$Xe | 6.13E+03 | 1.22E+05 |
| $^{135}$Xe | 1.09E+06 | 1.94E+07 |
| $^{138}$Xe | 1.61E+06 | 2.39E+07 |

RSCS
Radiation Safety & Control Services

# Response Factor (Efficiency) Changes With Decay Time

Low Range (Slide Open)

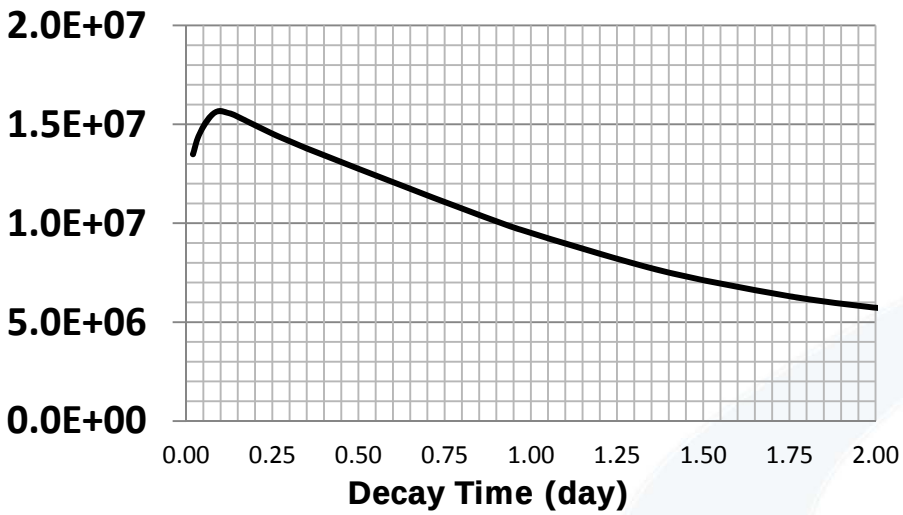


Intermediate Range (Slide Closed)

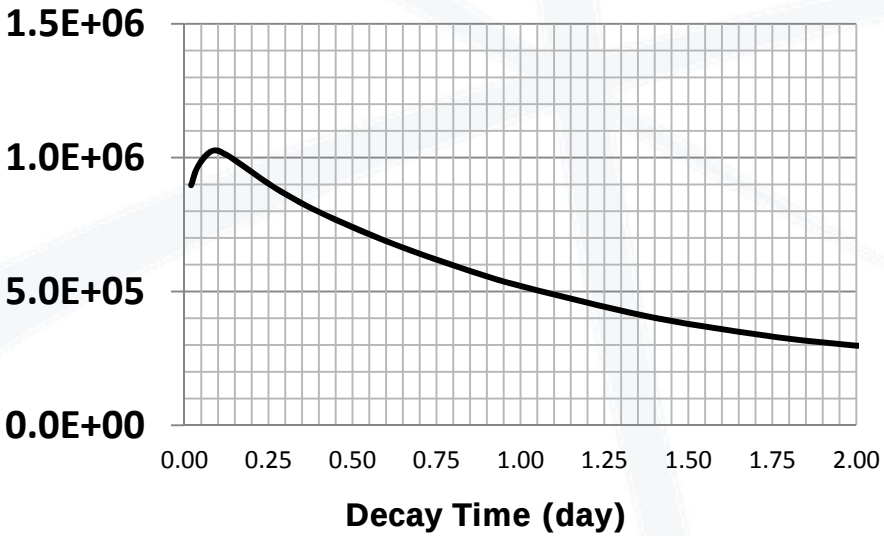


3X Change from 0 to 2 Days

RSCS
Radiation Safety & Control Services

# MDC and UDC

| Configuration | Source | MDC (µCi $cm^{-3}$) | UDC (µCi $cm^{-3}$) |
|---|---|---|---|
| Low Range | 30 Min Post LOCA | 1.48E-06 | 2.22E-01 |
| | $^{133}Xe$ | 4.36E-06 | 6.54E-01 |
| Intermediate Range | 30 Min Post LOCA | 2.23E-05 | 3.34+00 |
| | $^{133}Xe$ | 8.69E-05 | 1.30E+01 |

RSCS
Radiation Safety & Control Services

# Validation

- Solid Source Calibration
  - NIST Traceable
  - “Weightless”
  - Tc-99, Sr-90 at 1 cm from Probe
  - MCNP Modeled Geometry

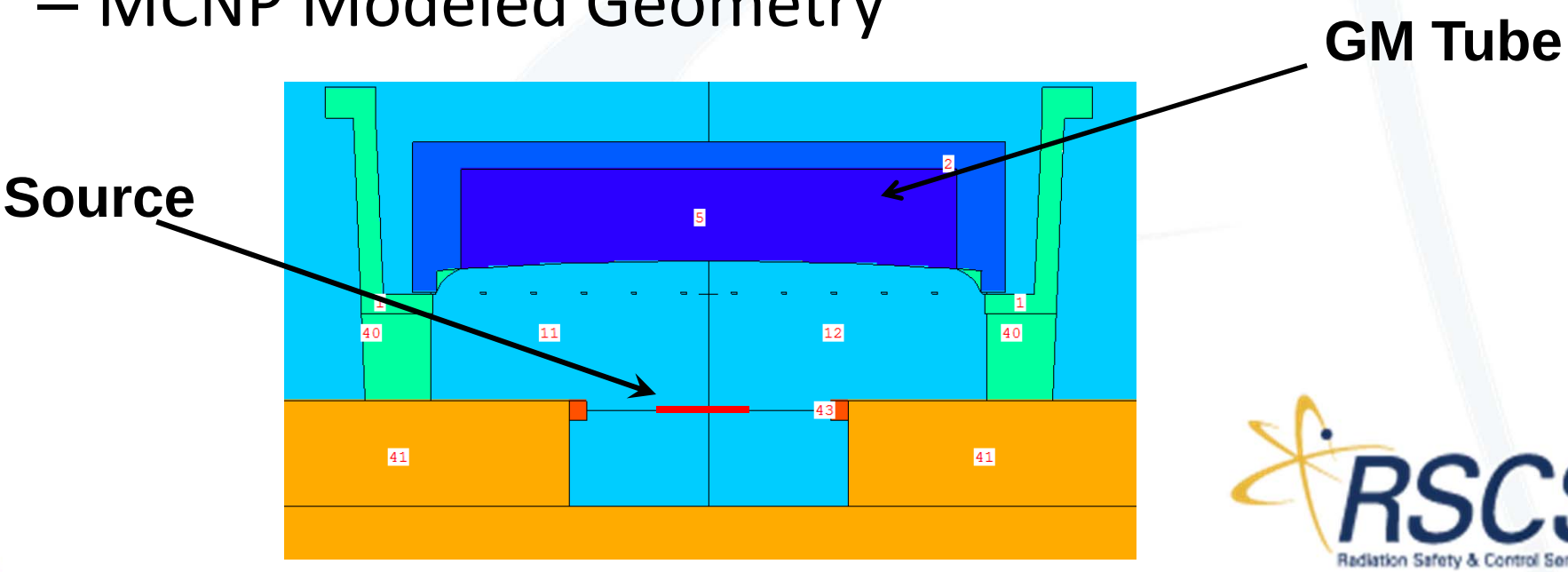


RSCS
Radiation Safety & Control Services

# MCNP Comparison

| Nuclide | Simulated Efficiency (c/β) | Measured Efficiency (c/β) | Relative Difference |
|---|---|---|---|
| $^{90}Sr$ / $^{90}Y$ | 17.9% | 19.0% | 6% |
| $^{99}Tc$ | 11.2% | 10.6% | -5% |

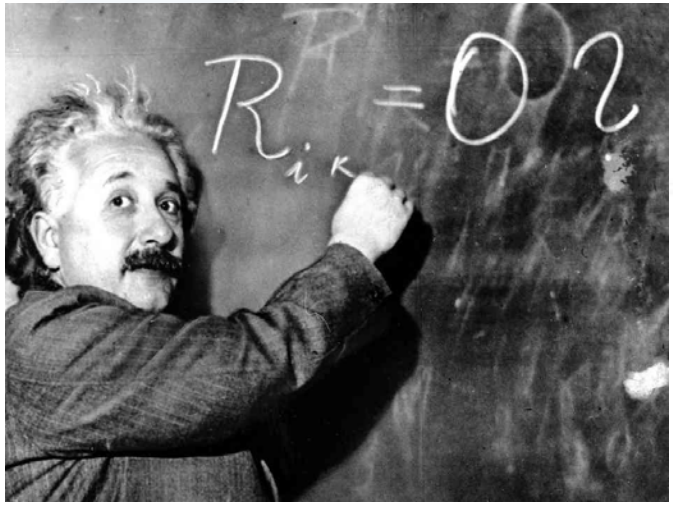


RSCS
Radiation Safety & Control Services

# Uncertainty Analysis

$$\sqrt{\qquad\qquad\qquad\qquad\qquad\qquad\qquad\qquad}$$

- = Relative error of weightless beta source comparisons (±6%),
- = The MCNP relative error for Xe-133 (3.8% for the Low Range and 4.7% Int. Range),
- = Maximum Conversion Factor relative error of 8% & 16 % for Low and Int. Range Respectively, and
- = Relative difference for air density changes (6.3 %).

( )

( )

RSCS
Radiation Safety & Control Services

# Use and Interpretation

$$\frac{\qquad\qquad}{\left(\frac{\qquad\qquad}{\qquad\qquad}\right)}$$

- Start with collimator “Open”
- Divide net Response by “Response Factor” for source term, s, collimator position, h, and time after shutdown, t.
- If off-scale, repeat with collimator “closed”
- Input into Dose Projection Software

RSCS
Radiation Safety & Control Services

# Remote Indications

- Mirion's Telemetry System
  - WinWRM2
    - External Probe (uSv/hr)
    - Internal Probe (cpm)
  - Teleview 2000 (Limited to External Probe)
  - Teleview 3000 (Most Flexible)
- Can be viewed from any networked computer

RSCS
Radiation Safety & Control Services

# WinWRM2

- Ambient Radiation Level (uSv/hr)
- External Probe (cpm)
- Alarm Indications
  - Audio/Video
- Trend Data

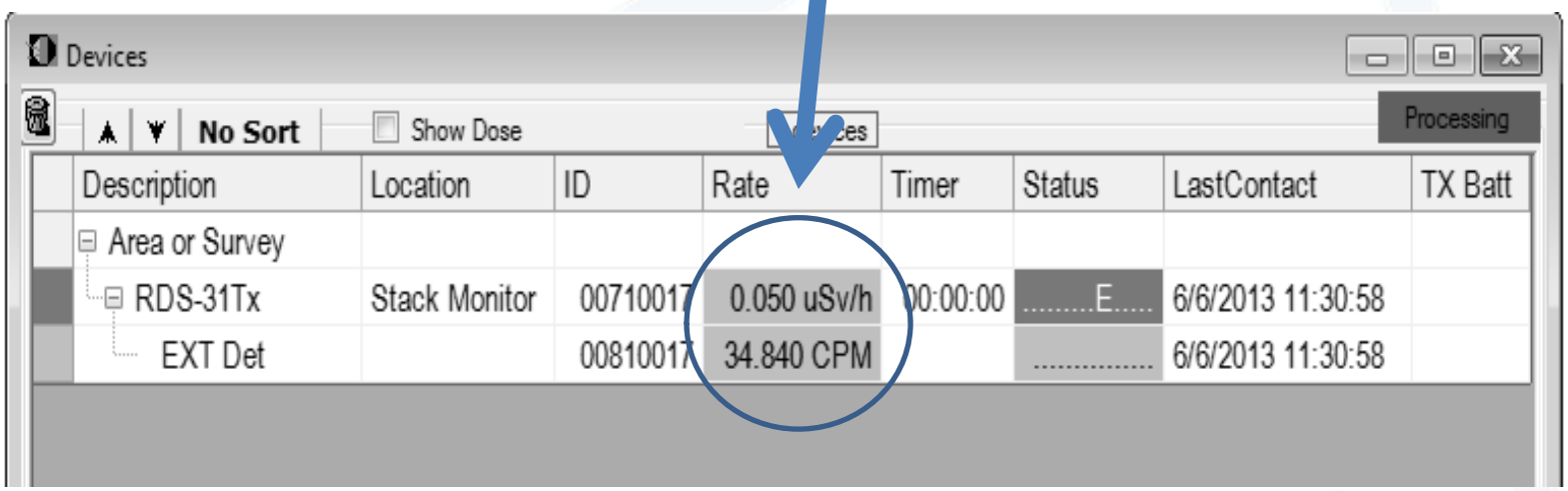


RSCS
Radiation Safety & Control Services

# Cost

- RDS-31/GMP-25 with Peripherals ~$3000
- Standard Lead Bricks - ~$500
- Noble Gas Chamber - ~$3500
- Engineering/Calculations - $$$ Variable

RSCS
Radiation Safety & Control Services

# Conclusions

- ✓ Accuracy
- ✓ LER Mitigation
- ✓ Detection Range
- ✓ Remote Indications
- ✓ Minimal/Effective Shielding
- ✓ Mostly Commercially Available

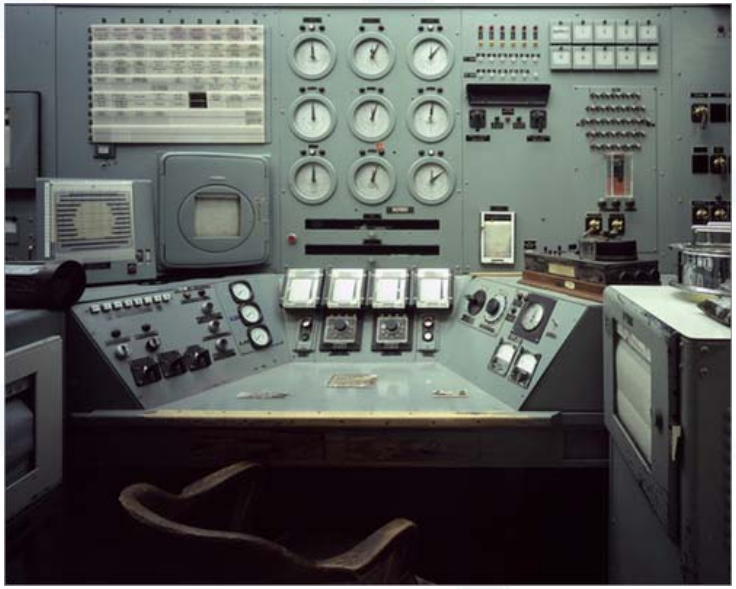

RSCS
Radiation Safety & Control Services

# Questions?

RSCS
Radiation Safety & Control Services