Gaseous Effluent Monitoring

Considerations of
ANSI N13.1-1999 and
RG 1.183

Presented at
2013 RETS-REMP WORKSHOP
Westminster, CO

Purpose

- Demonstrate method to strengthen gaseous effluent program
- Discuss challenges and possible solutions to gaseous effluent monitoring

CGS Exhaust Overview

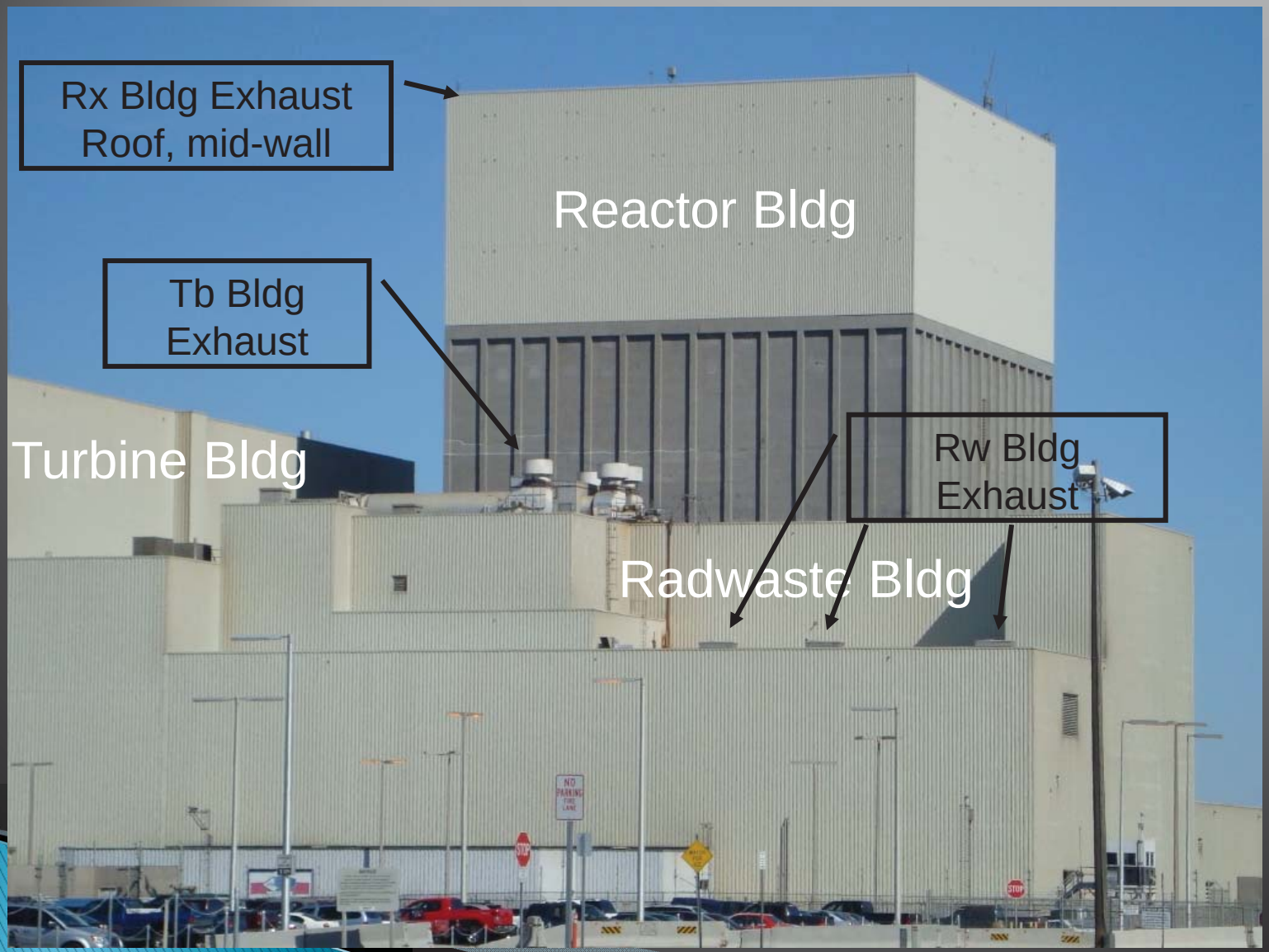

Reactor Building Release Duct

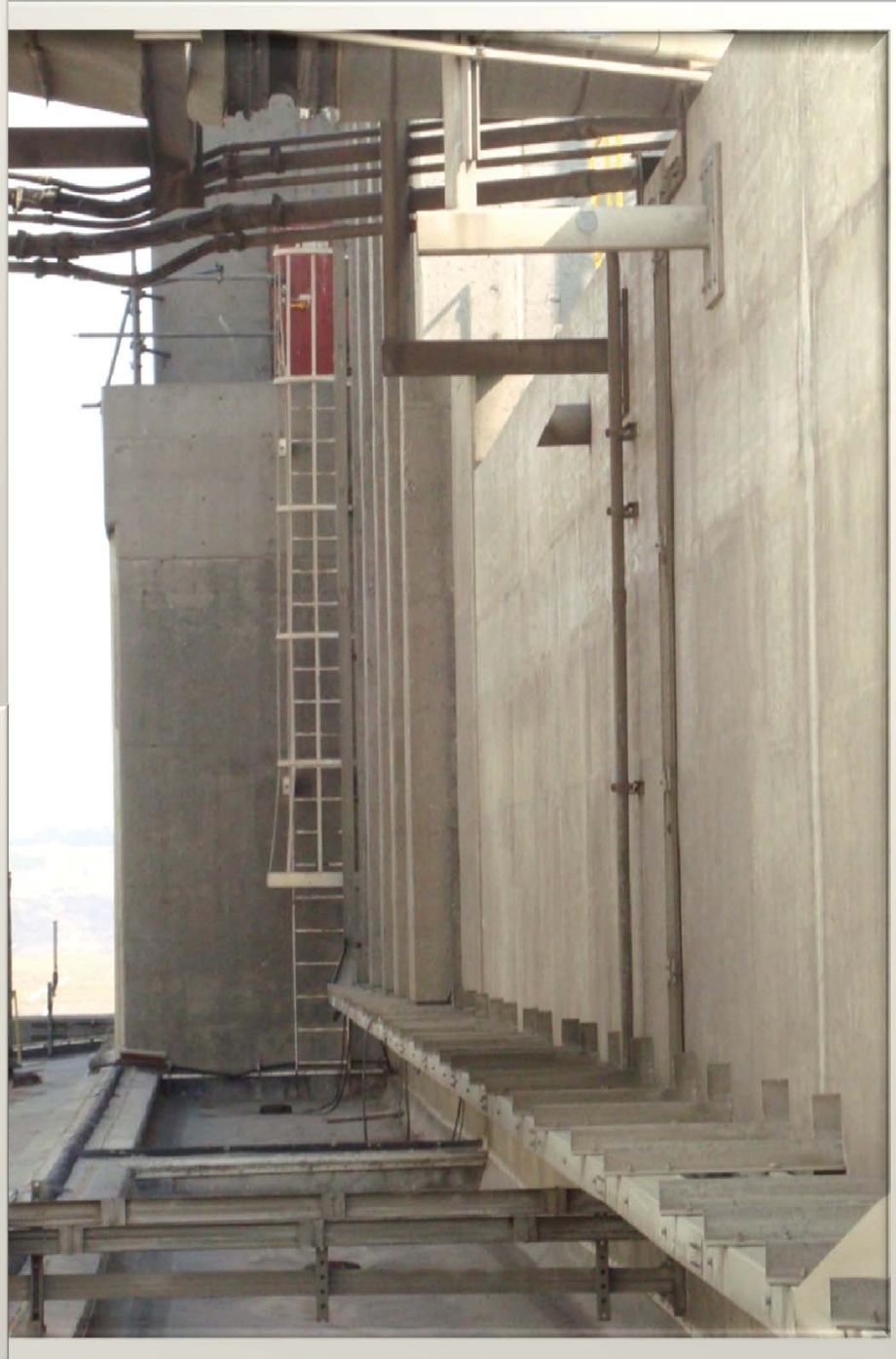

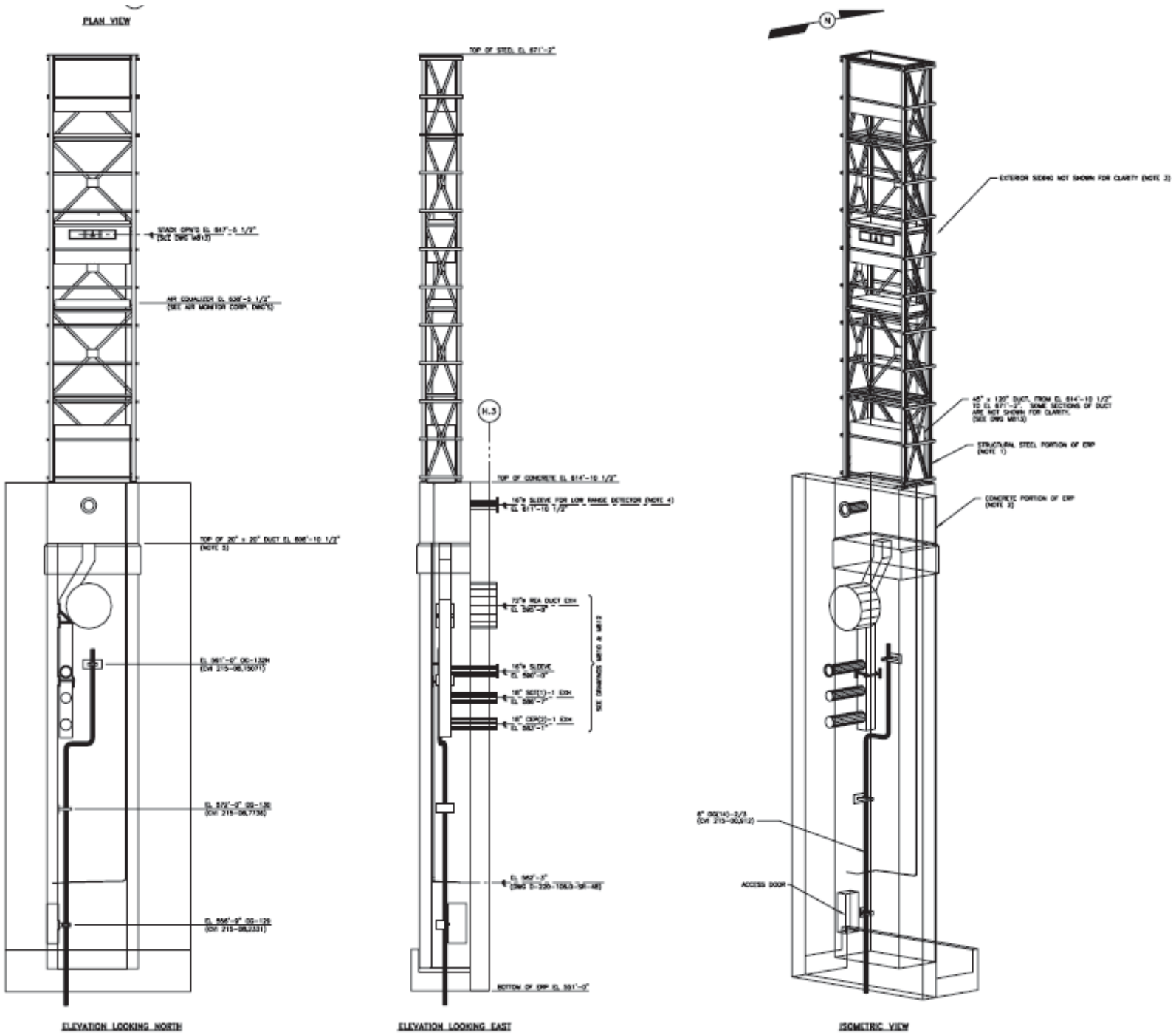
PLAN VIEW
STACK OPNG EL 847'-5 1/2"
(SEE DWG M813)
AIR EQUALIZER EL 838'-5 1/2"
(SEE AIR MONITOR COMP. DWG'S)
TOP OF 20" x 20" DUCT EL 806'-10 1/2"
(NOTE 3)
EL 761'-0" OG-132M
(CVI 215-08L15071)
EL 572'-0" OG-136
(CVI 215-08L7136)
EL 556'-9" OG-128
(CVI 215-08L2331)
ELEVATION LOOKING NORTH
TOP OF STEEL EL 871'-2"
H.3
TOP OF CONCRETE EL 814'-10 1/2"
16"ø SLEEVE FOR LOW RANGE DETECTOR (NOTE 4)
EL 811'-10 1/2"
72"ø REA DUCT EXH
EL 787'-9"
16"ø SLEEVE
EL 790'-9"
16" SCF(1)-1 EXH
EL 788'-9"
16" CSP(2)-1 EXH
EL 787'-1"
SEE DRAWINGS M810 & M812
EL 763'-1"
(DWG S-220-10L0-3R-48)
BOTTOM OF ERP EL 551'-0"
ELEVATION LOOKING EAST
N
EXTERIOR SIDING NOT SHOWN FOR CLARITY (NOTE 2)
48" x 120" DUCT FROM EL 814'-10 1/2"
TO EL 871'-2". SOME SECTIONS OF DUCT
ARE NOT SHOWN FOR CLARITY.
(SEE DWG M813)
STRUCTURAL STEEL PORTION OF ERP
(NOTE 1)
CONCRETE PORTION OF ERP
(NOTE 2)
6" OG(14)-2/3
(CVI 215-06L512)
ACCESS DOOR
ISOMETRIC VIEW

ODCM Sample Nozzles

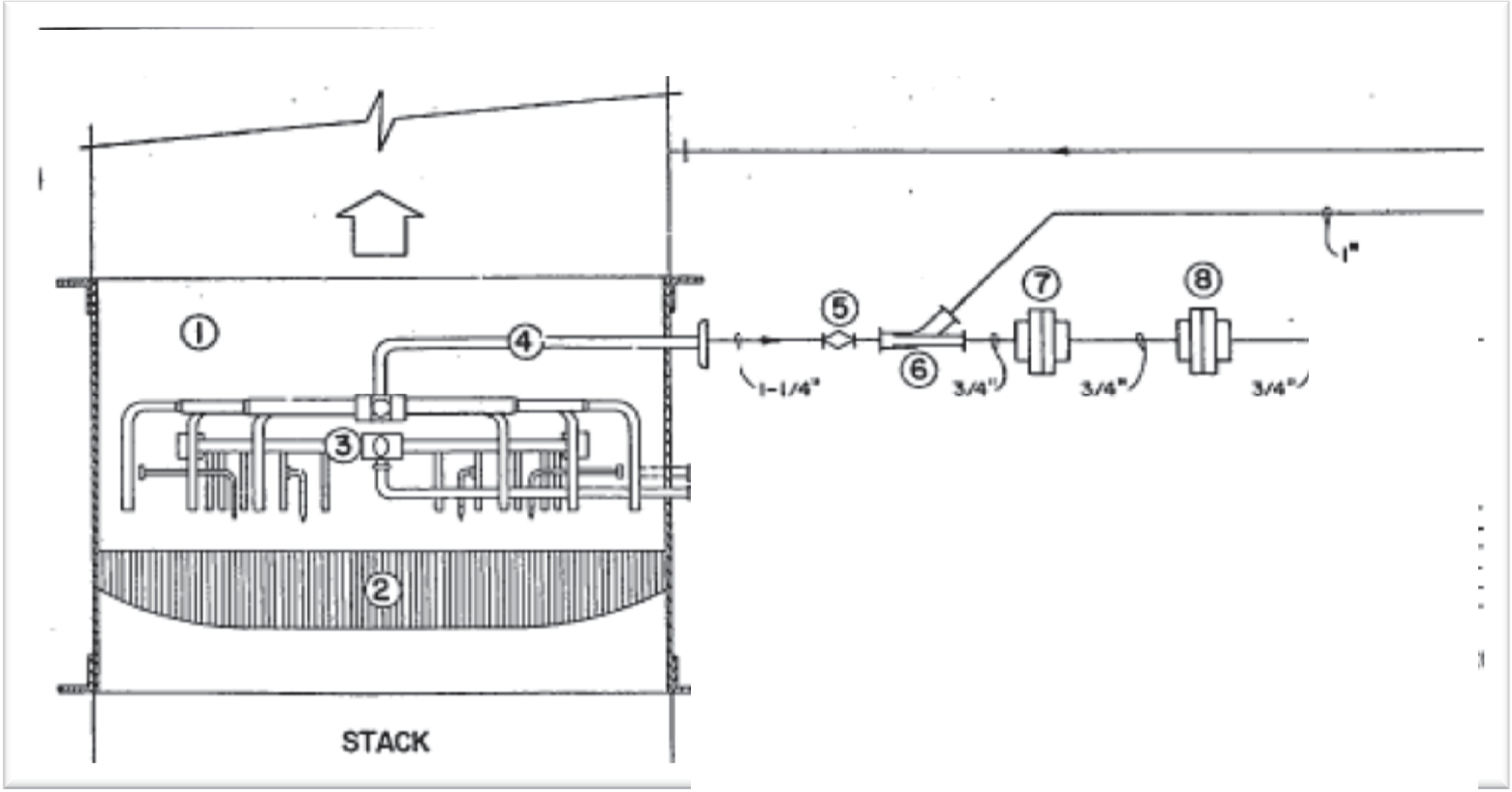

Multi-Nozzle Array

1993 Problem

- Problem: NRC questions compliance to intent of NUREG-0737 Table II.F.1-2 for iodines (99.8% line loss).

- Answer: HpGe detectors behind lead shields on refuel floor with helium-cooled cryostats and long coaxial cable run to NIMBINs and Control Room for isotopic data.

Reactor Building Effluent Stack Monitor

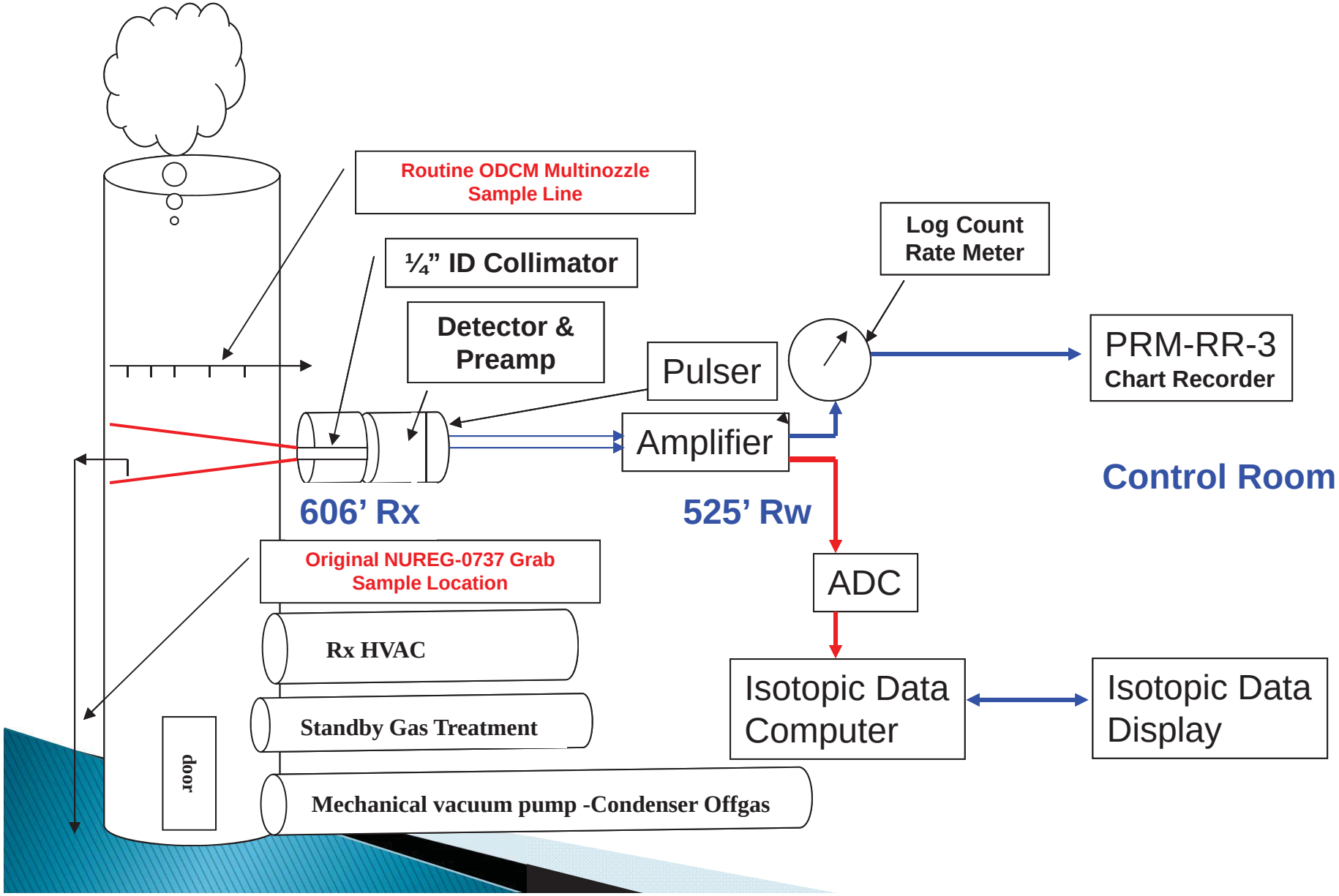

2012 Problem

- Problem: Accident Sampling (HpGe) Long history of noise, obsolescence, configuration control issues, power supply issues, NIMBIN component failures, etc.

- Answer: Revert to standard sample line.

Challenge to Project

- CGS commitment to ANSI N13.1-1969 but Aim for the 2011standard!
- Transport/Plateout codes assume **clean** stainless steel – After 25 yrs?
- Estimates of loading in sample lines is close to ANSI threshold for cleaning
- Lack of empirical data to support gaseous effluent characterization in duct
- Single shrouded probe vs multi-nozzle rake
- Iodine sample adequacy

Project Responds

ANSI N13.1 Tests and Methods

- Flow distribution profile
  - Pitot tube and Digital Manometer
  - COV <20%
- Swirl
  - S-type Pitot tube
  - Machined protractor
  - Angle <20 degrees

ANSI N13.1 Tests and Methods

- Particle (Aerosol) profile
  - **Oil particles – Optical Particle Counter**
  - COV <20%
- Gas profile
  - **Sulfur-hexafluoride – Photo Acoustic Gas Analyzer.**
  - COV <20%
  - Max Deviation from mean <20%

ANSI N13.1 Tests and Methods

Cases

- 4 Accident – SGTS min/max
- 2 Routine – HVAC min/max
- With/Without Flow Straightener

Pitot Tube Limitation

- Scale model testing showed SGTS flow into large duct challenged pitot tube accuracy.

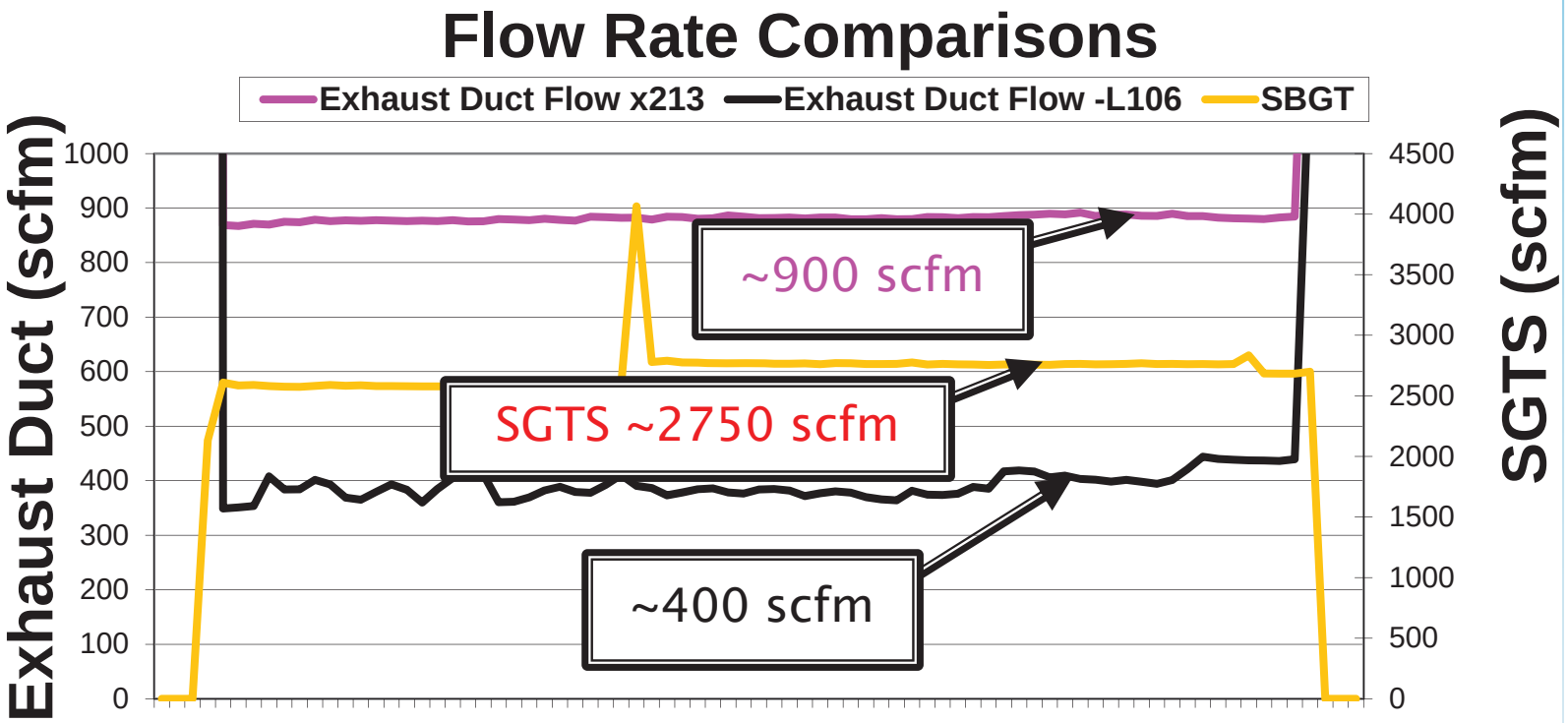

Test Results – Particulates/Gas

With Upstream Flow Straightener

Test Cases	Flow COV %	Swirl Angle degrees	Particle COV %	Gas COV %	Gas -Max Deviation
SGTS 1 min	19.1	2.3	4.7	11.5	**28.7**
SGTS 1 max	**25.8**	4.6	3.1	7.2	13.8
SGTS 2 min	**21.5**	4.4	2.6	9.2	15.7
SGTS 2 max	**25.1**	6.9	3.9	6.7	17.9
HVAC min	8	3.5	12.6	12.1	19.7
HVAC max	9.3	3.1	11.4	10.1	18.7

Test Results – Particulates/Gas

Without Upstream Flow Straightener

Test Cases	Flow COV %	Swirl Angle degrees	Particle COV %	Gas COV %	Gas -Max Deviation
SGTS 1 min	**38.3**			6.4	15.7
SGTS 1 max	**45.2**			4.2	9.8
SGTS 2 min	**46.5**			5.4	10
SGTS 2 max	**44.4**	7.8		5.4	13.8
HVAC min	11.3	3.7	3.8	7.8	13.5
HVAC max	9.1	3.5	5.4	8.2	13.4

SGTS Velocity Profile –Train 1

With Upstream Flow Straightener

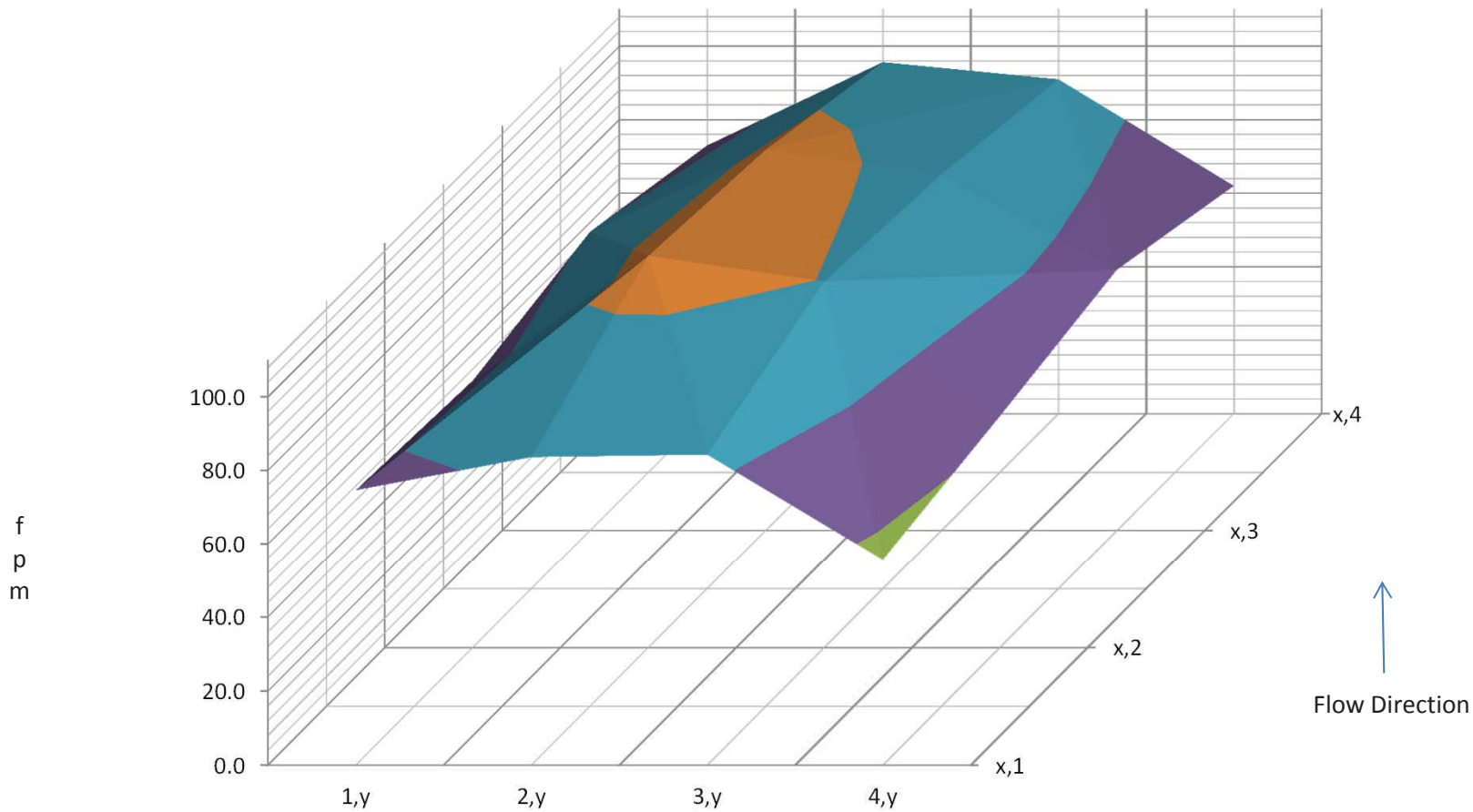

Test Case 1: Minimum flow rate of 148 cfm through SGTS Duct 1 with Flow Straightener, Velocity Profile

SGTS Velocity Profile –Train 1

Without Upstream Flow Straightener

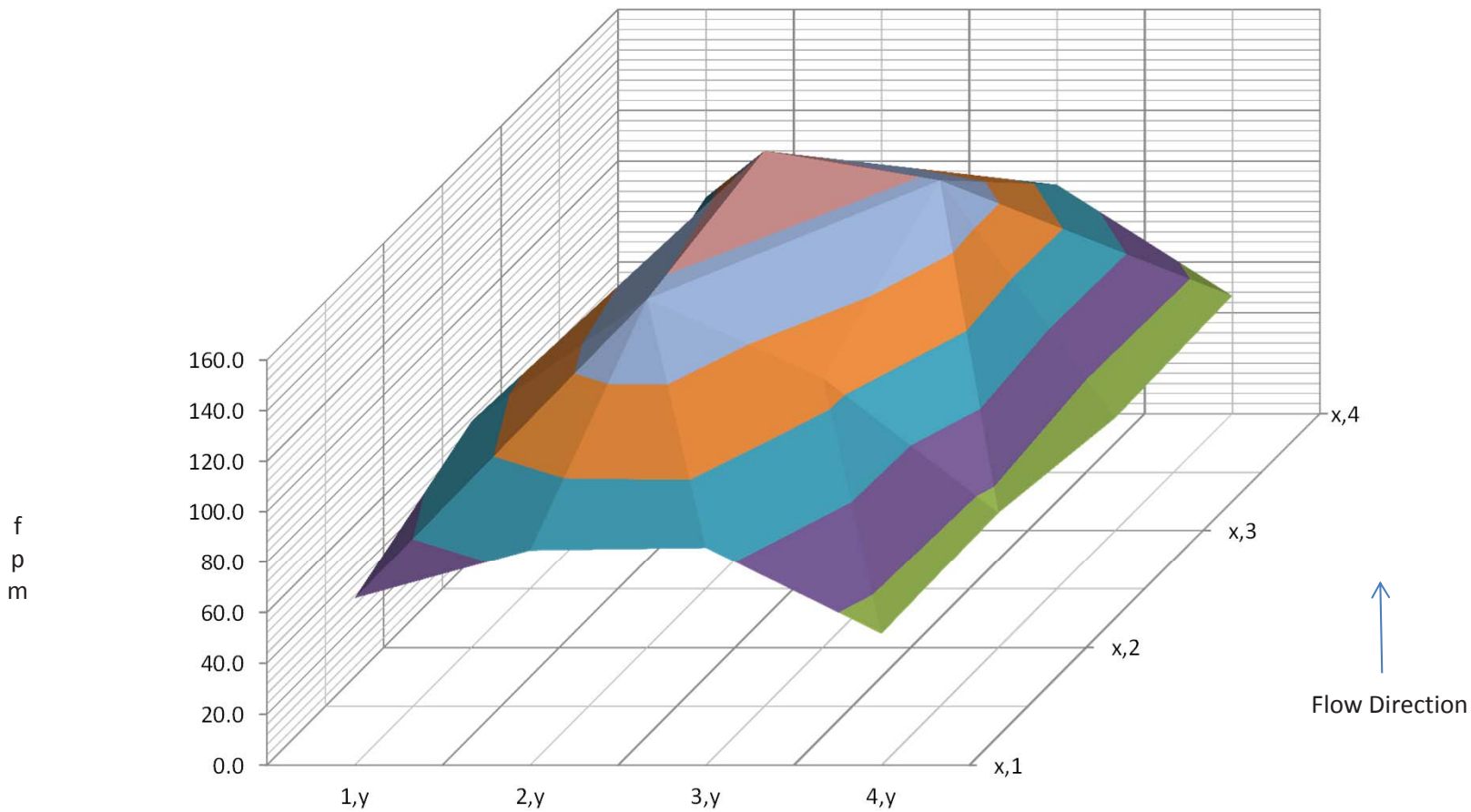

Test Case 1: Minimum flow rate of 148 cfm through SGTS Duct 1 w/o Flow Straightener, Velocity Profile

SGTS Velocity Profile –Train 2

Without Upstream Flow Straightener

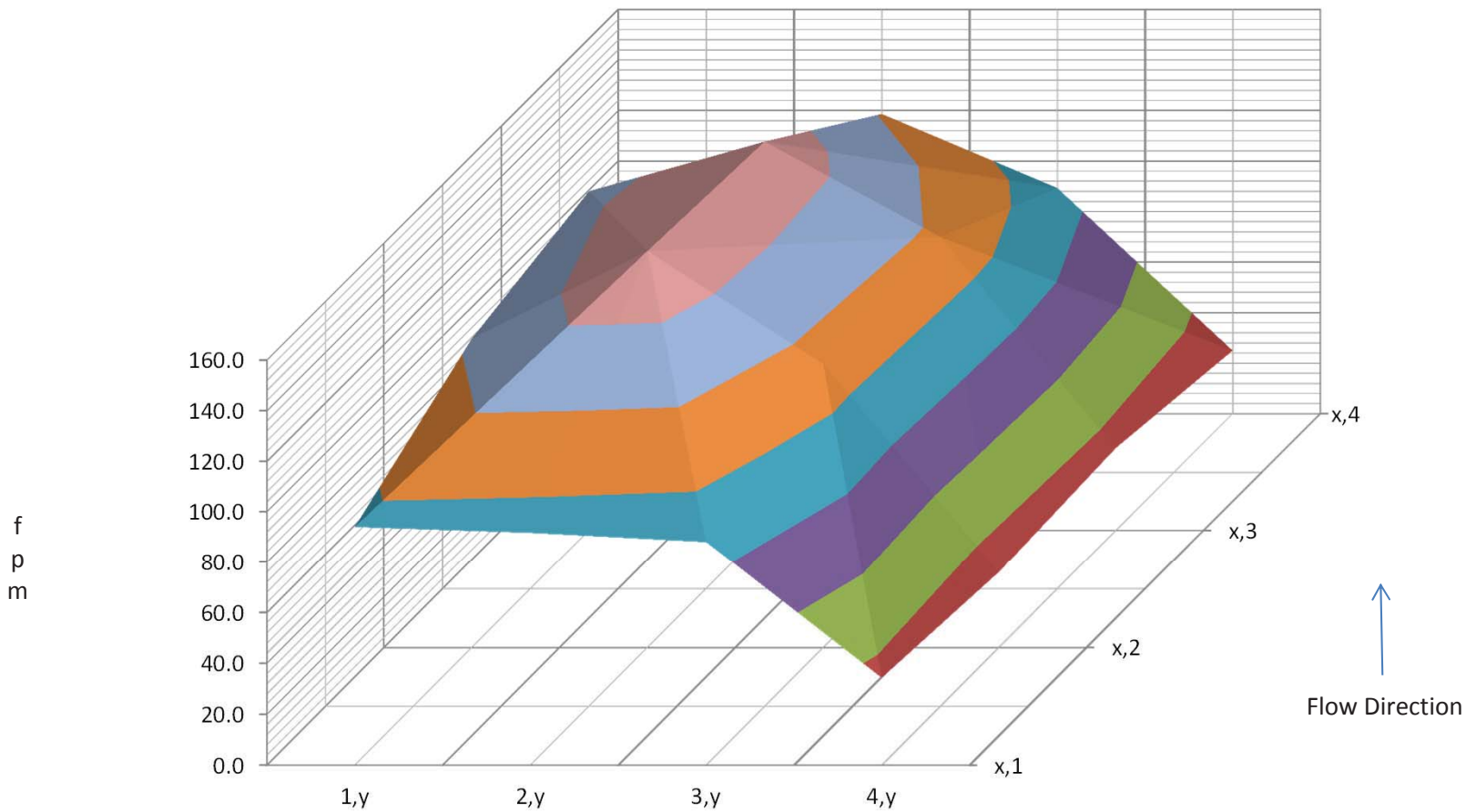

Test Case 3: Minimum flow rate of 148 cfm through SGTS Duct 2 w/o Flow Straightener, Velocity Profile

Flow Distribution

- Problem with flow distribution with SGTS flow related to exhaust design.
- 20” x 20” duct open at both ends routes discharge non-uniformly
- Will continue to use flow rate measurements directly from SGTS fans.

Flow Straightener

- Removal of the upstream flow straightener
  - Negligible impact to swirl angle
  - Improves mixing
  - Major impact on <u>SGTS flow distribution</u>
  - Negligible impact on SGTS gas uniformity
  - Facilitates installation and post maintenance inspections/cleaning

Proof of Scale Model

- CGS will need to validate that the scale model is representative of the actual release duct
  - Calculation?
  - In stack testing?
  - Remote-controlled probes?
  - Breaching the building/duct?
  - How much testing is enough?

Calculational Results

- Particulate Retention
- Iodine Retention

Sample Line Transmission
Flow Rate & Tube Diameter

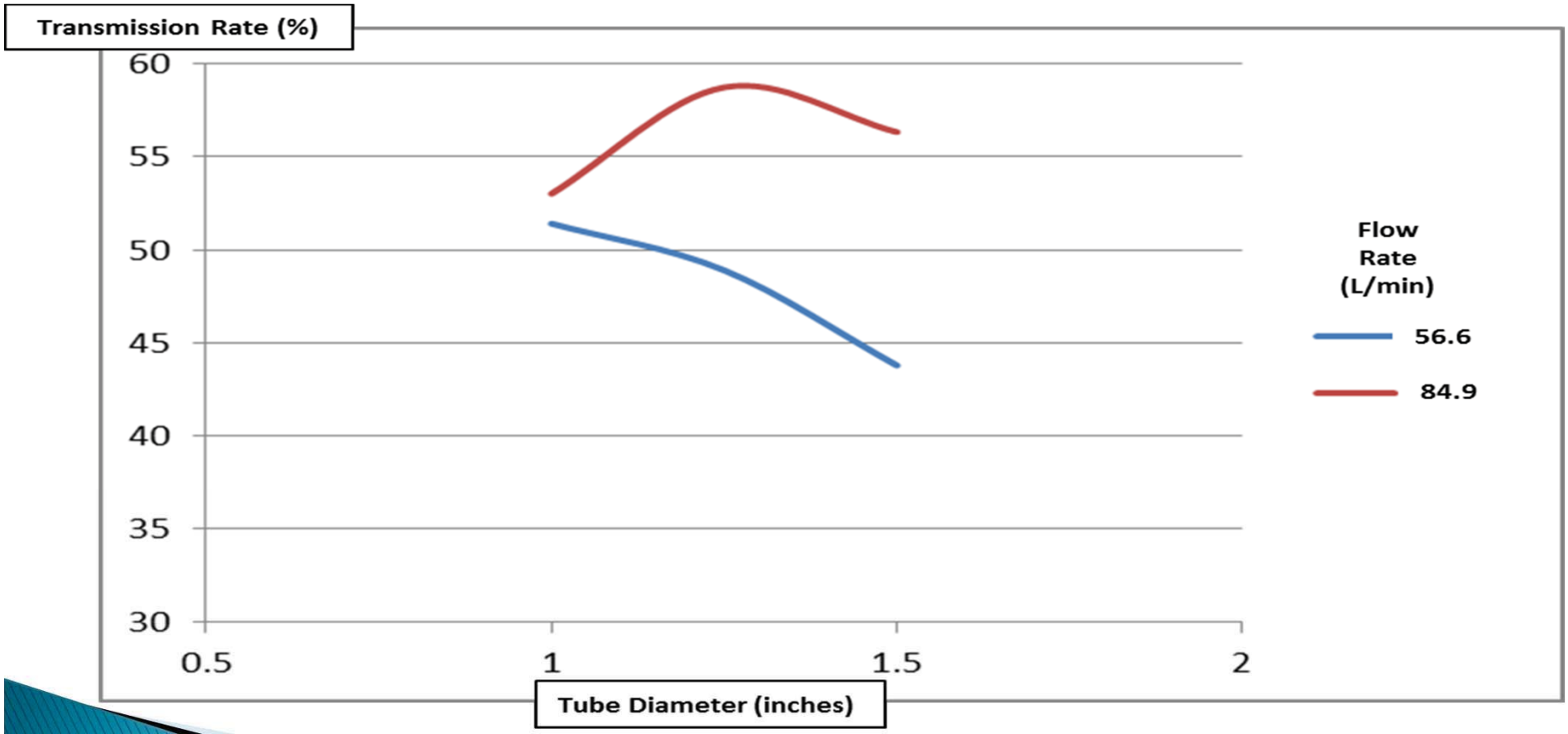

Particulate Calculations

- ANSI N13.1 – >50% transmission of particulates
- CGS – 83% currently for routine effluents
- CGS – 35% calculated transmission of particulates on proposed line with 40' horizontal run (Deposition Code – 10 micron)
- ASHRAE & industry studies show 2-4 micron = >90%
- Plan to test following installation

NUREG-0737 Expectations

- NUREG-0737 Table II.F.1-2 shows the expectation for iodine sample media during and after an accident

SAMPLING MEDIA

- Iodine > 90% effective adsorption for all forms of gaseous iodine.
- Particulates > 90% effective retention for 0.3 micron (μ) diameter particles.

- No value for line loss.
- Intent of NUREG-0737

Iodine Species Fractions

	RG 1.183 % To Coolant	RG 1.183 % Released	NUREG-4757 % Fraction BWRs	NUREG-4757 % Fraction PWRs
Elemental iodine (I_2)	4.85	97	28	27
Organic iodide (CH_3I)	0.15	3	40	31
Particulates (CsI)	95		12	2
Hypoiodous acid (HIO)			20	40

Iodine Calculation Results

	RG 1.183 % Fraction	NUREG-4757 % Fraction	CGS SS Line % Retention	CGS Teflon® Line % Retention	CGS Gamma Spec
Elemental iodine (I_2)	97+	28	0.05	40	100
Organic iodide (CH_3I)	3	40	100	100	100
Particulates (CsI)		12	35	?	100
Hypoiodous acid (HIO)		20	98	98	100

Reducing Iodine Loss

The key to prevent loss is

- Low surface area
  - Smaller diameter
  - Shorter sample line

    (16 ft of Stainless results in 50% transport efficiency*)
- Non-reactive surface
  - Teflon®-lined sample line

Design Challenges

Teflon®-coated Sample Lines

- How will heat tracing affect surface properties?
- Removable sections for inspection?
- How do you test smoothness?
- How do you calculate particulate loss in a Teflon®-coated line when Deposition assumes clean stainless steel?

Further Design Challenges

- Inspections/Cleaning – ANSI N13.1
  - < 5% nozzle occlusion
  - < 1 g/m^2 (mean mass) of deposited material
  - How? Through a port? Internal duct scaffold ?
- Leave scaffolding in place following installation?
  - Facilitates inspections/maintenance
  - Improve mixing
  - More particulate impaction

If you know, tell me!

- Who has a heat-traced, Teflon®-coated sample line?
- How does it hold up?
- What is your elemental transport efficiency? Calculated or Tested?